REVISIONS				
ZONE	REV.	DESCRIPTION	DATE	APPROVED
	A	CHANGED LID TOP	5/26/2005	

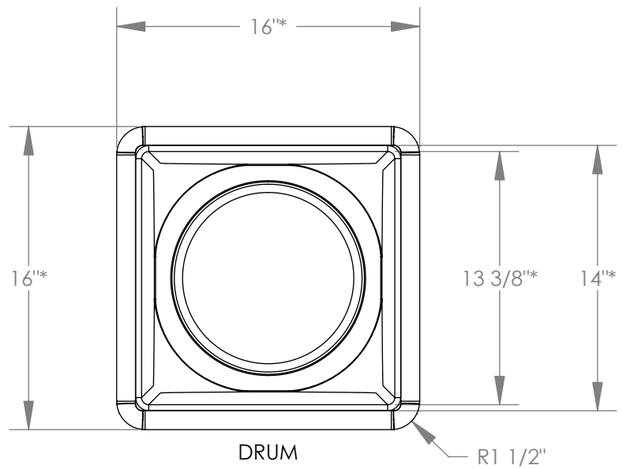

DRUM

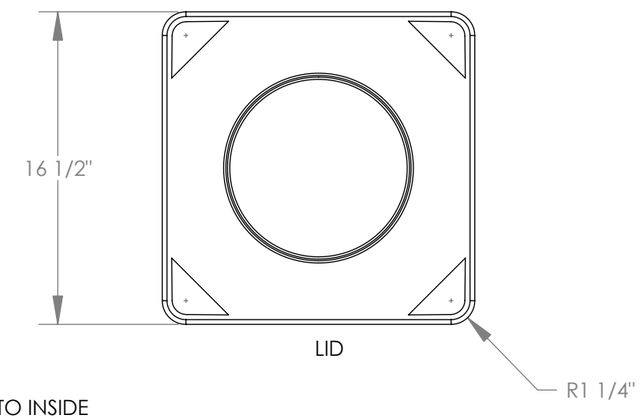

LID

* - DIMENSION TO INSIDE OF MOLDED PART BASED ON 0.188" NOM. WALL THICKNESS

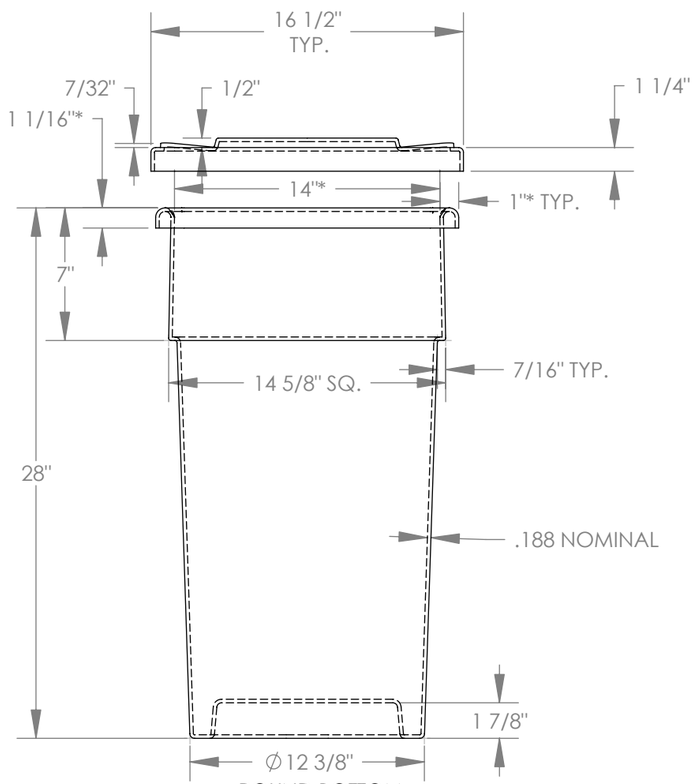

ROUND BOTTOM

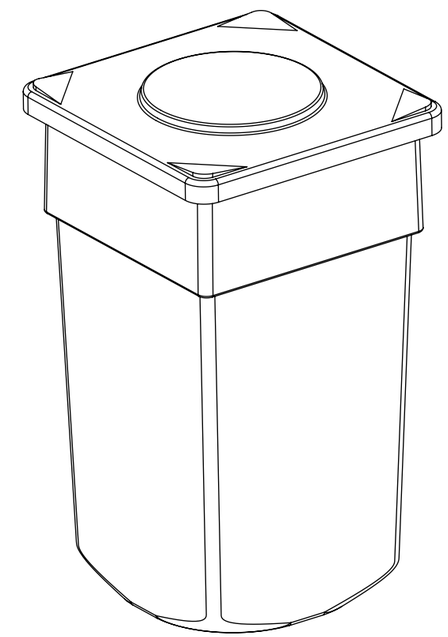

PROPRIETARY AND CONFIDENTIAL

THE INFORMATION CONTAINED IN THIS DRAWING IS THE SOLE PROPERTY OF REMCON PLASTICS, INC. ANY REPRODUCTION IN PART OR AS A WHOLE WITHOUT THE WRITTEN PERMISSION OF REMCON PLASTICS, INC. IS PROHIBITED.

NEXT ASSY	USED ON
APPLICATION	

UNLESS OTHERWISE SPECIFIED:

DIMENSIONS ARE IN INCHES
TOLERANCES:
FRACTIONAL ±
ANGULAR: MACH ± BEND ±
TWO PLACE DECIMAL ±
THREE PLACE DECIMAL ±

INTERPRET GEOMETRIC TOLERANCING PER:

MATERIAL
LLDPE

FINISH

DO NOT SCALE DRAWING

	NAME	DATE
DRAWN	DCL	8/5/2003
CHECKED		
ENG APPR.		
MFG APPR.		
Q.A.		

COMMENTS:

PROJECT: 1440

REMCON PLASTICS

TITLE:
SD-20 DRUM
GENERAL SPECIFICATIONS

SIZE	DWG. NO.	REV
B	B-20071	A

SCALE: 1:8 WEIGHT: 13.178 3 SHEET 1 OF 1