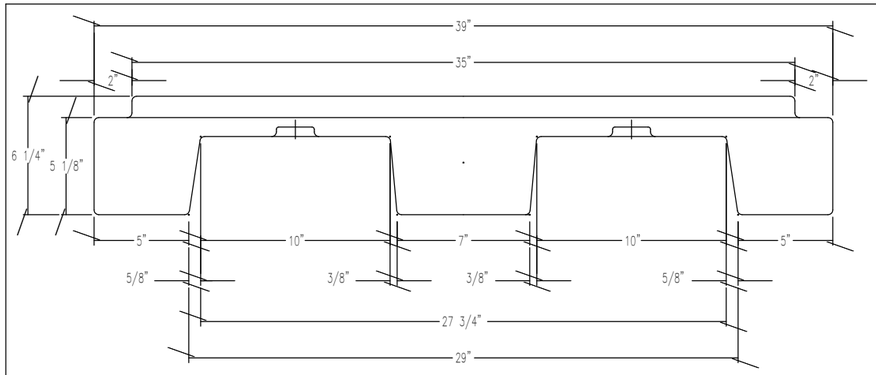

END ELEVATION

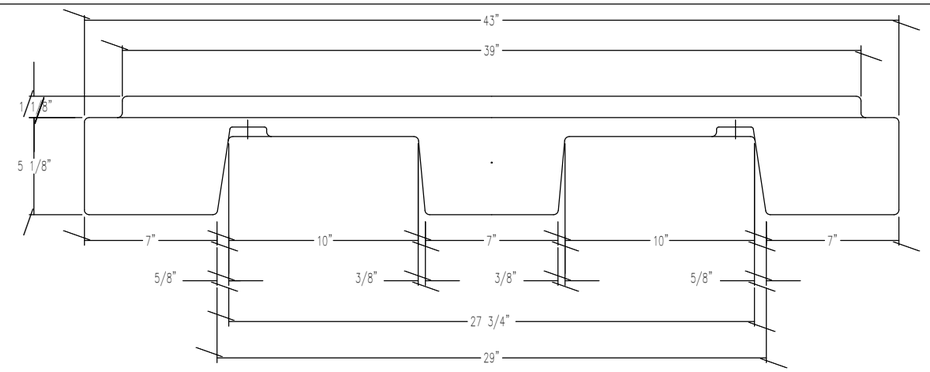

SIDE ELEVATION

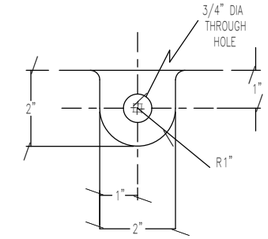

BOTTOM PLAN VIEW DETAIL FOR
STYLE "A" THROUGH HOLES
(TYP 4 PLCS)

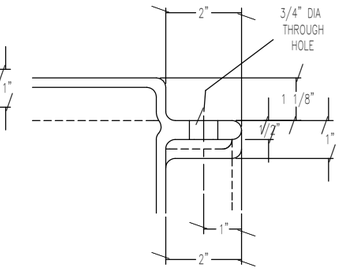

SECTIONAL DETAIL ON C-C
FOR ALL THROUGH HOLES
(TYP 8 PLCS)

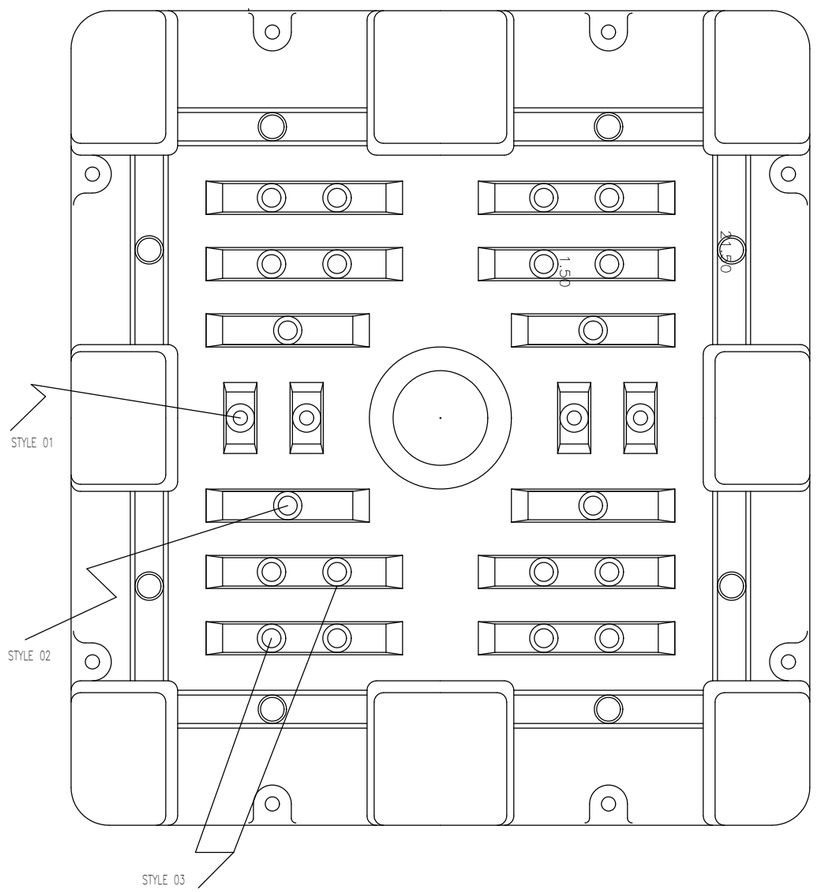

BOTTOM VIEW

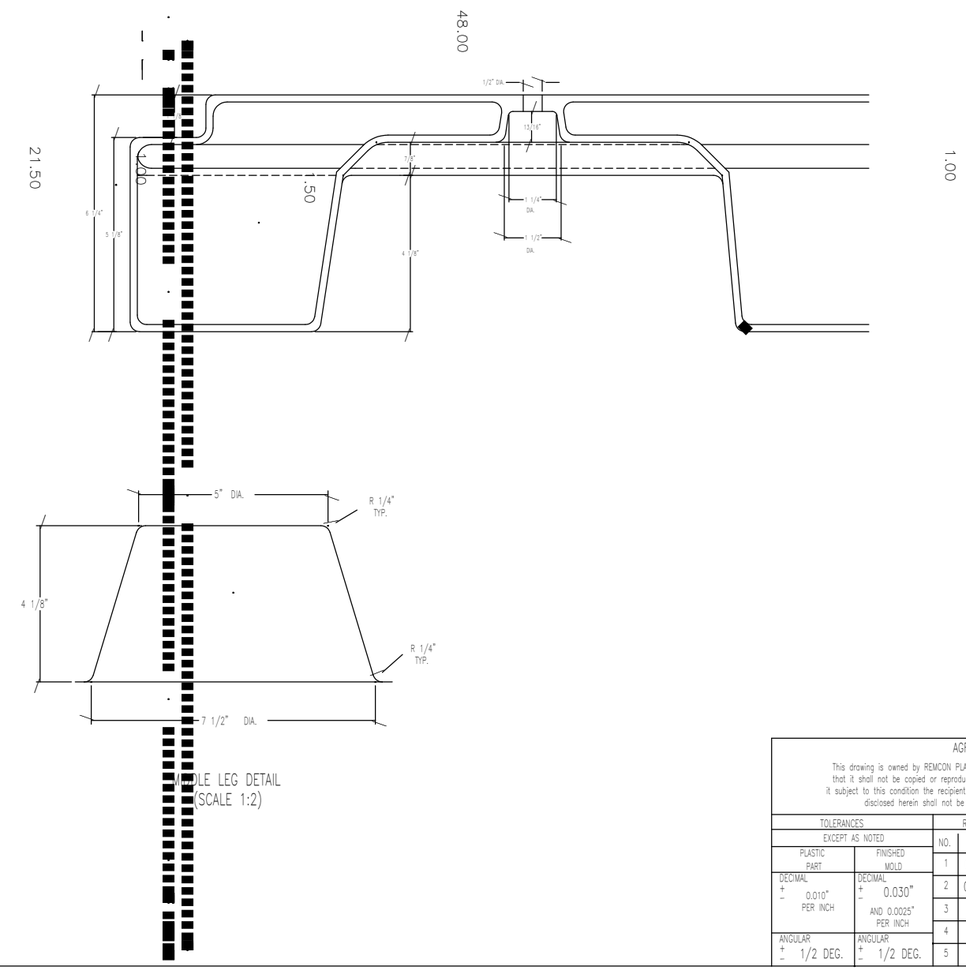

MIDDLE LEG DETAIL
(SCALE 1:2)

NOTES:

1. DO NOT SCALE DRAWING.
2. DRAWING SHOWS AS-MOLDED PART.
3. ALL CORNERS MUST HAVE RADII, EXCEPT THROUGH HOLES AS DETAILED.

   ALL UNSPECIFIED RADII TO BE 1/4".
4. CAST ALUMINUM TOOL MUST BE PRODUCED WITH EXTRA MATERIAL ON KISS-OFFS TO PERMIT FINE-TUNING OF MOLDED PART.
5. ALL DIMENSIONS ARE TO THEORETICAL SHARP CORNERS, UNLESS OTHERWISE STATED.
6. SURFACE FINISH TO BE A MINIMUM OF 80 GRIT INDUSTRIAL HAND SAND, WITH MOTOR MARKS REMOVED AND IMPERFECTIONS BLENDED.
7. WALL THICKNESS SHOWN FOR REPRESENTATION ONLY.
8. CERTAIN LOGICAL HIDDEN LINES OMITTED FOR CLARITY.

AGREEMENT TO MAINTAIN CONFIDENTIALITY

This drawing is owned by REMCON PLASTICS INC. and shall be returned upon demand. It is loaned on condition that it shall not be copied or reproduced or submitted to others without the Owner's consent. In accepting it subject to this condition the recipient further agrees that this drawing or any design, detail, or concept disclosed herein shall not be used in any way detrimental or in competition with the Owner.

TOLERANCES EXCEPT AS NOTED	
PLASTIC PART	FINISHED MOLD
DECIMAL ± 0.010" PER INCH	DECIMAL ± 0.030" AND 0.0025" PER INCH
ANGULAR ± 1/2 DEG.	ANGULAR ± 1/2 DEG.

REVISIONS		
NO.	DATE	BY
1	06/23/90	KB
2	03/08/96	PFE
3		
4		
5		

REMCON PLASTICS INC.

TITLE PALLET BASE DESIGN 01

DRAWN BY	DATE	SHEET OF
KB	06/23/90	2
SCALE 1:4	INDEX NO. XXXXX	DRAWING NO. D-10063