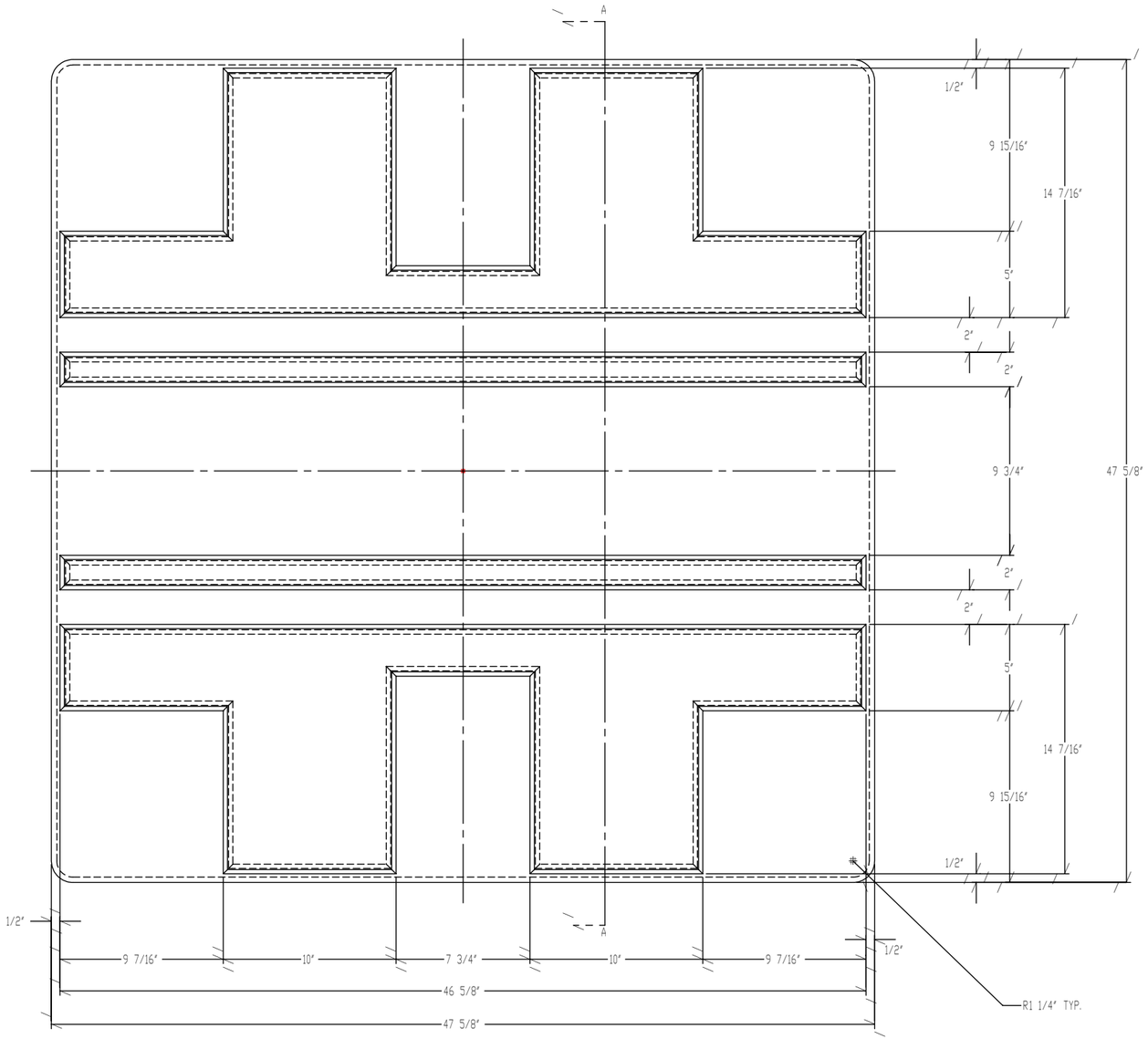

PLAN VIEW

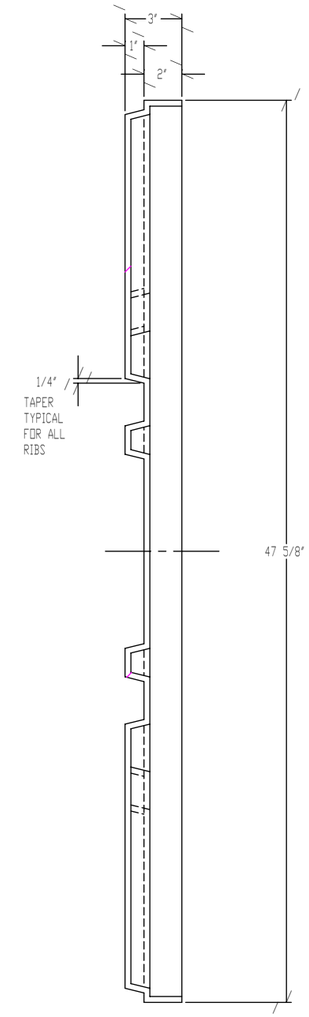

SECTIONAL ELEVATION
ON A-A

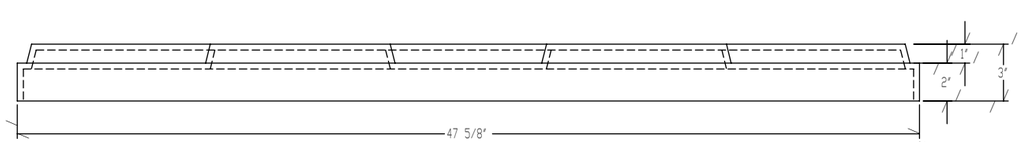

FRONT VIEW

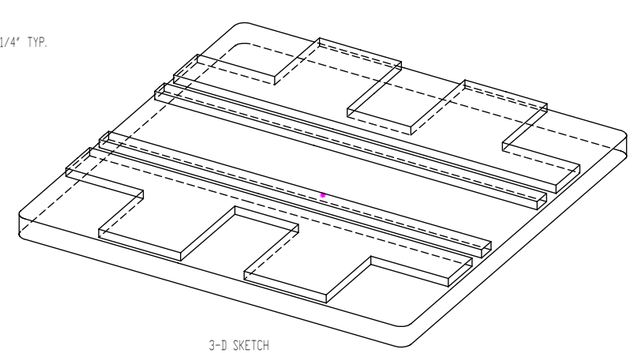

3-D SKETCH
(NOT TO SCALE)

NOTES:

1. SCALE FOR QUOTE/ESTIMATING PURPOSES ONLY.
2. DRAWING SHOWS FINISHED MOLDED PART - TRIMMED.
3. ALL DIMENSIONS ARE REFERENCED TO THEORETICAL SHARP CORNERS ON OUTSIDE SURFACE OF MOLDED PART, UNLESS OTHERWISE STATED.
4. UNLESS STATED OTHERWISE, ALL CORNERS WILL HAVE RADII.
5. WALL THICKNESS SHOWN FOR REPRESENTATION ONLY.

TOLERANCES	REVISIONS			REMCON PLASTICS INC.
EXCEPT AS NOTED	NO.	DATE	BY	TITLE LID FOR NESTABLE BIN CONCEPT - 06
DECIMAL ± S.R.M.T.	1			
	2			
FRACTIONAL ± S.R.M.T.	3			DRAWN BY PFE / DATE 08/10/92 / SHEET 1 OF 1
	4			
ANGULAR ± S.R.M.T.	5			SCALE 1:4 / INDEX NO. 01006 / DRAWING NO. D-10232