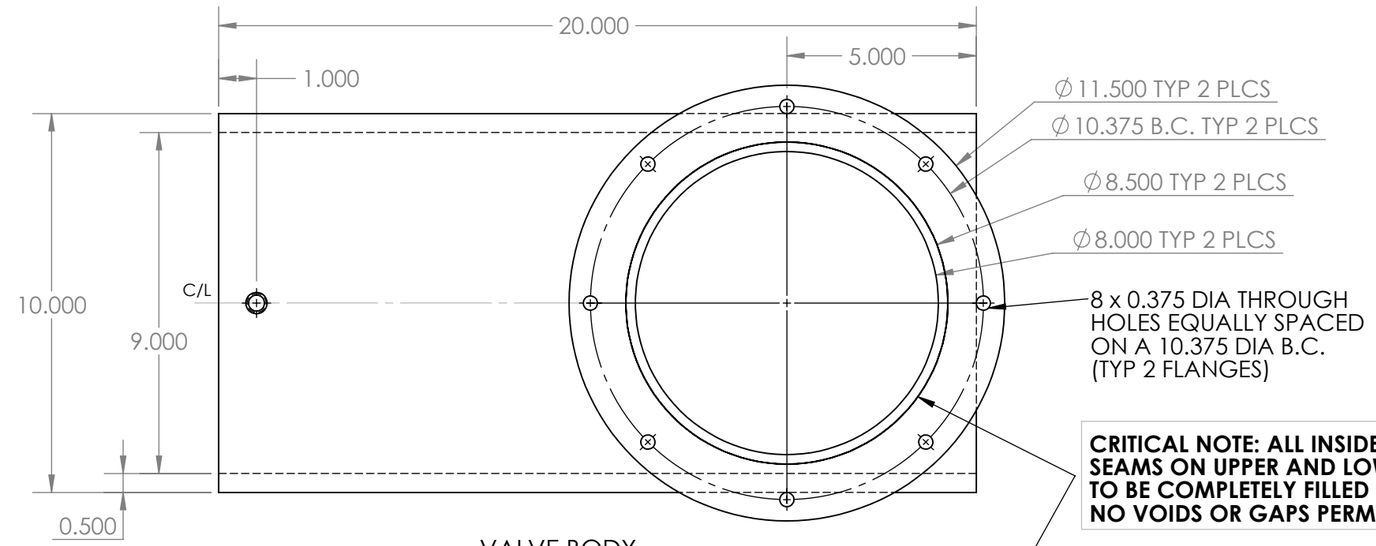

VALVE BODY DETAILS

CRITICAL NOTE: ALL INSIDE JOINTS AND SEAMS ON UPPER AND LOWER THROUGH TUBES TO BE COMPLETELY FILLED AND GROUND SMOOTH. NO VOIDS OR GAPS PERMITTED

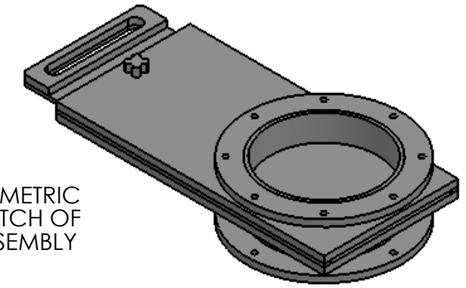

ISOMETRIC SKETCH OF ASSEMBLY

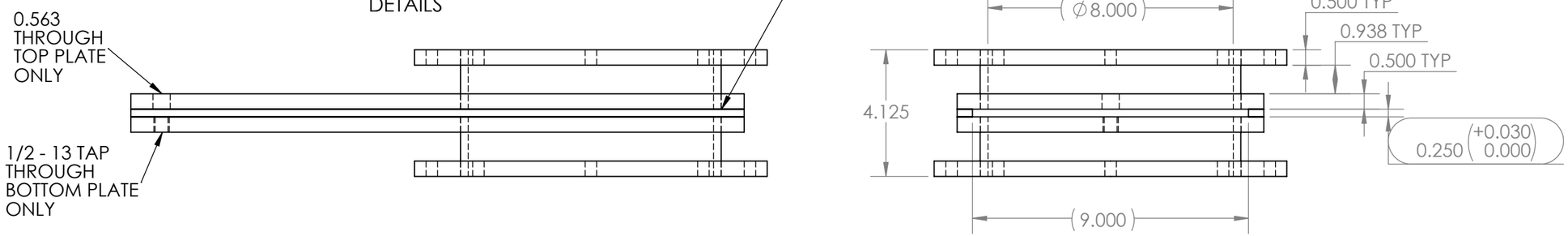

LOCK-DOWN SCREW DETAILS

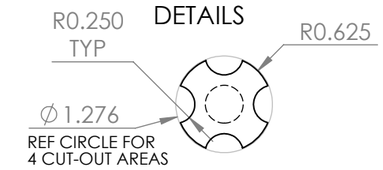

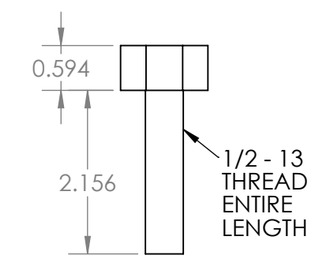

NOTES:
1. DRAWING SHOWS FABRICATED SLIDE GATE VALVE ASSEMBLY
2. MATERIAL IS HDPE SHEET OR PLATE, NATURAL COLOR STRESS RELIEVED, AND FDA COMPLIANT
3. VALVE BODY IS ALL-WELDED CONSTRUCTION
4. ALL DIMENSIONS REFERENCED TO THEORETICAL SHARP CORNERS
5. CRITICAL DIMENSIONS DENOTED WITH OVALS
6. REFERENCE DIMENSIONS IN PARENTHESIS

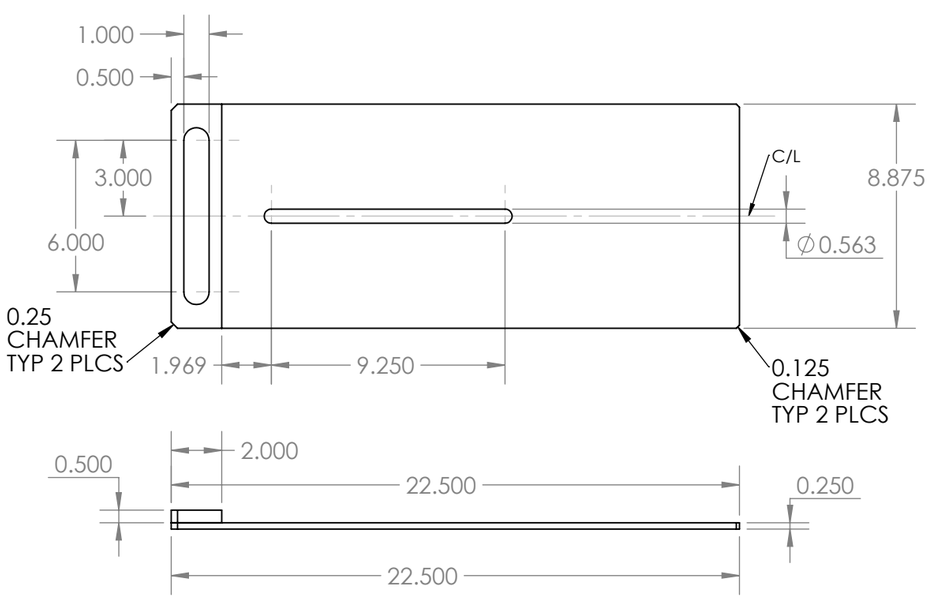

VALVE PLATE DETAILS

PROPRIETARY AND CONFIDENTIAL
THE INFORMATION CONTAINED IN THIS DRAWING IS THE SOLE PROPERTY OF REMCON PLASTICS INC. ANY REPRODUCTION IN PART OR AS A WHOLE WITHOUT THE WRITTEN PERMISSION OF REMCON PLASTICS INC IS PROHIBITED.

NEXT ASSY	USED ON
APPLICATION	

UNLESS OTHERWISE SPECIFIED:
DIMENSIONS ARE IN INCHES
TOLERANCES:
FRACTIONAL: N/A
ANGULAR: ±1/2DEG
DECIMAL: ±0.030 in

PROJECT NUMBER: PROP. UPDATES
MATERIAL: SEE NOTES
FINISH: SEE NOTES
DO NOT SCALE DRAWING

	NAME	DATE
DRAWN	PFE	3/18/13
CHECKED	PFE	3/18/13
ENG APPR.	KM	3/18/13

COMMENTS:

Remcon Plastics Inc.
208 Chestnut Street, Reading Pa, 19602

TITLE:
FABRICATED SLIDE GATE VALVE STYLE - 06

SIZE	DWG. NO.	REV
B	052705243053000	A

SCALE: N.T.S. WEIGHT: SHEET 1 OF 1